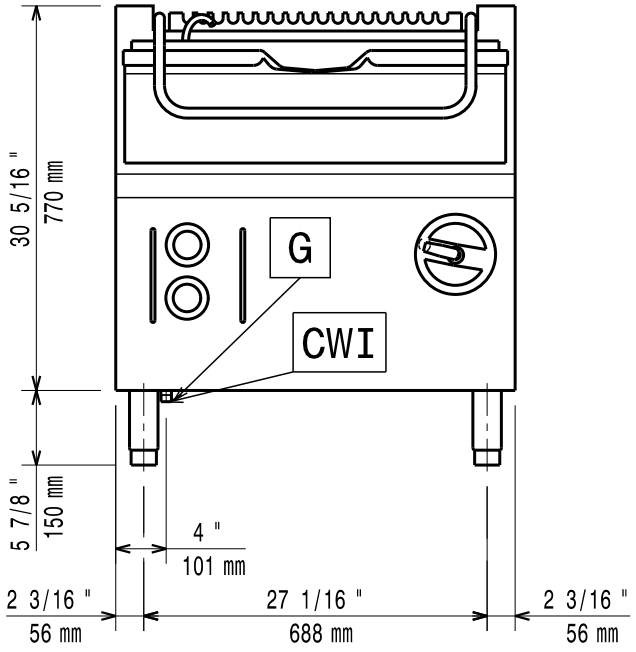
30 5/16 "
770 mm
G
CWI
5 7/8 "
150 mm
4 "
101 mm
2 3/16 "
56 mm
27 1/16 "
688 mm
2 3/16 "
56 mm

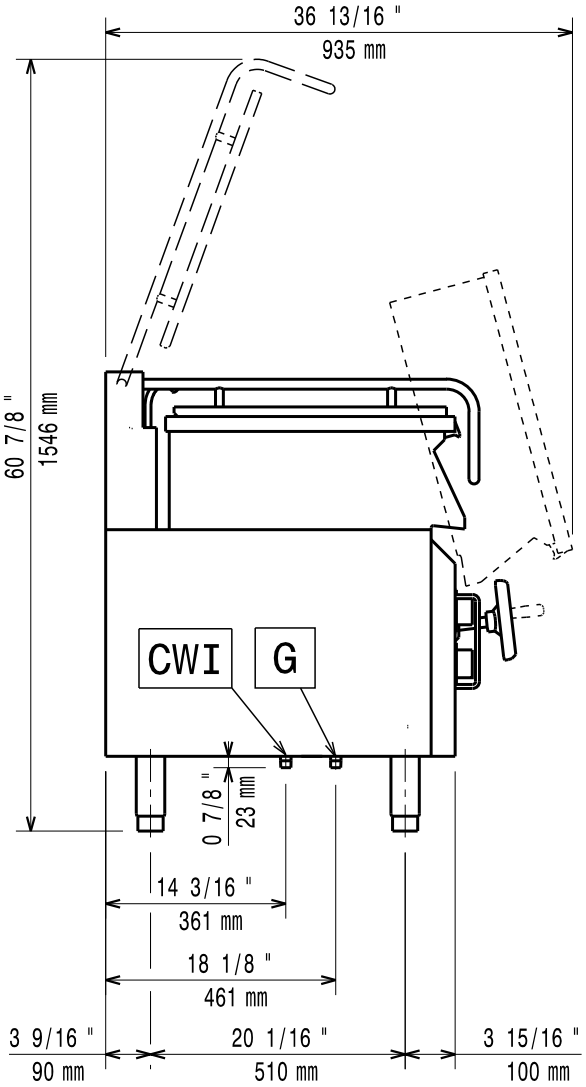
36 13/16 "
935 mm
60 7/8 "
1546 mm
CWI
G
0 7/8 "
23 mm
14 3/16 "
361 mm
18 1/8 "
461 mm
3 9/16 "
90 mm
20 1/16 "
510 mm
3 15/16 "
100 mm

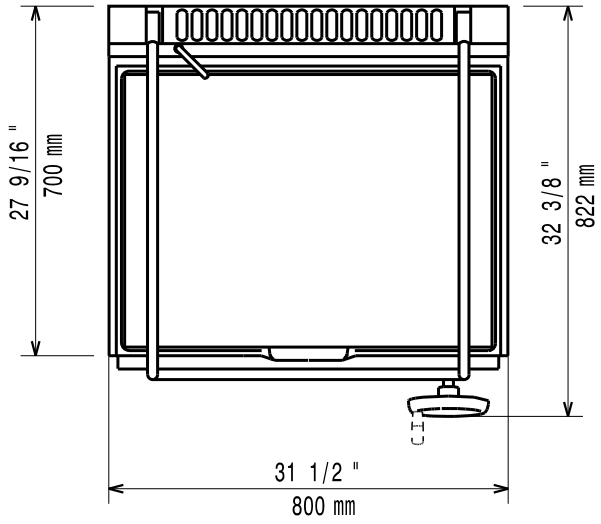
27 9/16 "
700 mm
32 3/8 "
822 mm
31 1/2 "
800 mm

597839900